Duramax® 75° hand torch parts

For use with the Powermax65®

Duramax 75° hand torch assembly

Item	Kit/Part number	Description
	059473	Duramax 75° hand torch assembly with 7.6 m (25') lead
	059474	Duramax 75° hand torch assembly with 15.2 m (50') lead
	059475	Duramax 75° hand torch assembly with 22.8 m (75') lead
1	228954	Kit: Duramax 75°/HRT Torch handle replacement
2	075714[1]	Handle screws, #4 x 1/2 slotted TORX pan head, S/B
3	228721	Kit: Duramax 75°/Duramax 15°/HRT/HRTs (spring and trigger assembly)
4	228714*	Kit: Duramax 75° Torch main body replacement (3/8" coupler)
4	228958*	Kit: Duramax 75° Torch main body replacment (1/2" coupler)
5	058519	O-ring
6	228719	Kit: Duramax 75° Cap-sensor switch replacement
7	228959[1]	Kit: Duramax 75° Torch lead replacement, 7.6 m (25')
7	228960[1]	Kit: Duramax 75° Torch lead replacement, 15.2 m (50')
7	228961	Kit: Duramax 75° Torch lead replacement, 22.8 m (75')
	223125[2]	Kit: 65 A Work lead with hand clamp, 7.6 m (25')

[1]Before ordering these parts verify the date the torch was built.
[2]Other work lead options available.

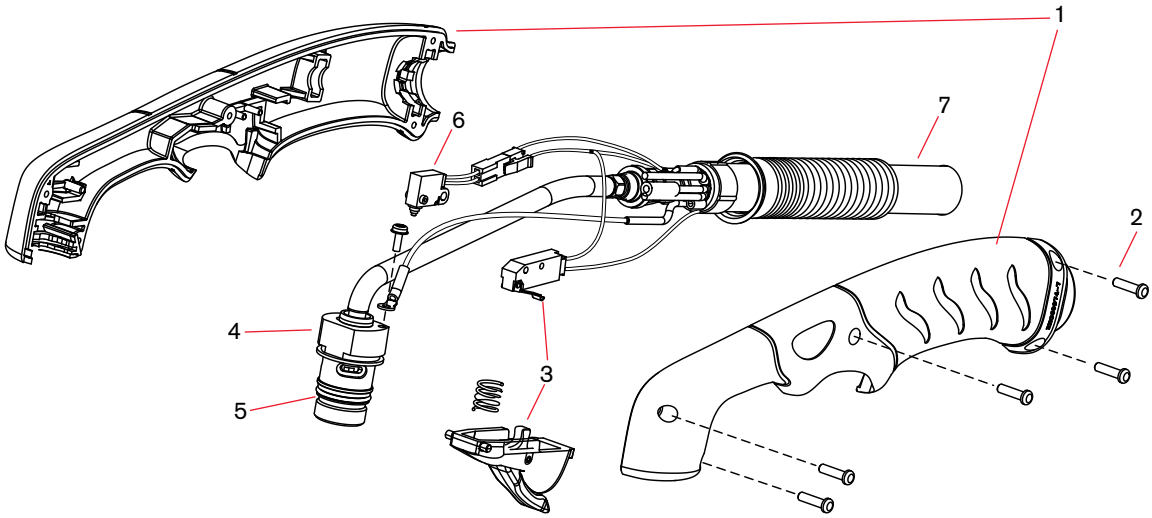

See pages 64–65 for current system part number information.