Cartridge Filter, Stationary - Art. No.: 83 200 110

» Two exhaust arms
» Self cleaning filters

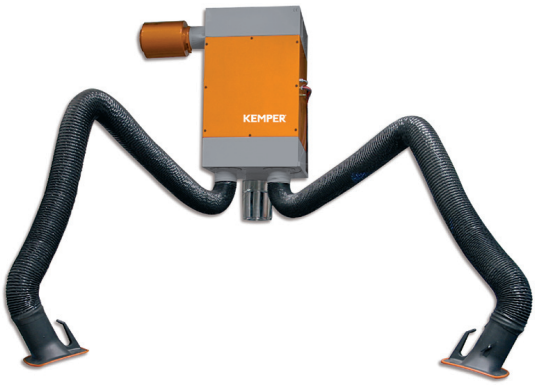

Applications

» High levels of smoke and dust
» Non-stop operation
» Two exhaust arms available

Benefits

» High efficiency due to automatic filter cleaning
» Less need to adjust the exhaust arm due to flow-optimised exhaust hood design
» Best health protection for employees by use of KemTex® ePTFE filter cartridges with surface filtration
» Low air consumption due to differential pressure-controlled cleaning
» Space-saving solution due to two extraction arms
» Possibility of working in two alternating places due to dampers in the extraction hood

Properties

» 360 degrees rotating exhaust hood with damper
» Automatic filter cleaning, pressure-controlled
» KemTex® ePTFE filter cartridges
» Automatic Start/Stop (optional)
» Lighting in the hood (optional)
» Arm from 5 m with boom
» Available with two arms
» Silencer
» Control box

Accessories

» Automatic start/stop
» Workplace lighting incl. on/off switch at the hood

Technical Data

Art. No.	**83 200 110**
Filter	
Filter stages	1
Filter method	Cleanable filter
Filter cleaning method	Rotating nozzle
Filter surface	8 m^2
Type of filter	Filter cartridge
Filter material	ePTFE membrane
Filter efficiency	> 99.9 %
Dust classification	M
Basic data	
Extraction capacity	2 x 700 m^3/h
Max. fan performance	3000 m^3/h
Dimensions (w x d x h)	655 x 655 x 1355 mm
Weight	142 kg
Motor power	1.5 kW
Power supply	3 x 400 V / 50 Hz
Rated current	3.5 A
Noise level	71 dB(A)
Additional information	
Fan type	Radial fan
Compressed air supply	5 - 6 bar
Quantity of extraction arms	2
Exhaust arm type	rigid metal tube arm
Diameter extraction arm	150
Length of exhaust arm	6 m
Compressed air reservoir	25
Capacity Dust collection container	11 l

Suitable for alveole exchangeable dusts
separation > 99 % of particles < 0,4 µm

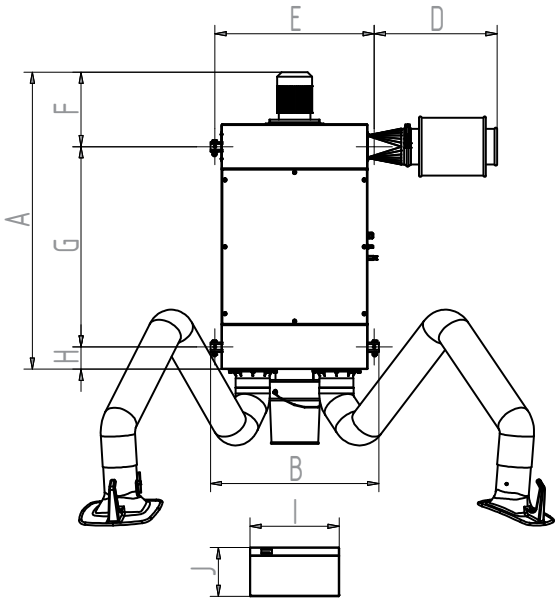

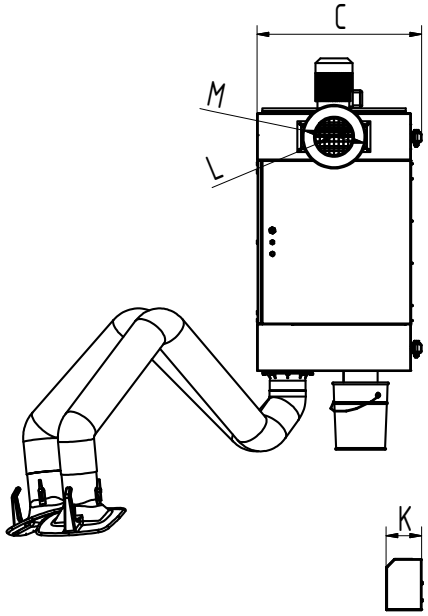

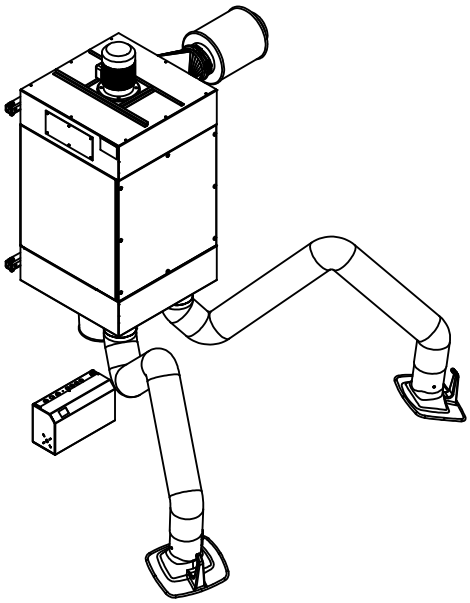

Technical Data

Dimensions	
A	1332 mm
B	755 mm
C	701 mm
D	551 mm
E	715 mm
F	337 mm
G	898 mm
H	97 mm
I	400 mm
J	218 mm
K	151 mm
L	158 mm
M	271 mm