Cartridge Filter, stationary

Art. No.: 83 100 106

Applications

- High levels of smoke and particles
- Non-stop operation

Benefits

- High efficiency due to automatic filter cleaning
- Less need to adjust the exhaust arm due to flow-optimised exhaust hood design
- Best health protection for employees by use of KemTex® ePTFE filter cartridges with surface filtration
- Low air consumption due to differential pressure-controlled cleaning

Technical Data

Filter	
Filter stages	1
Filter method	Cleanable filter
Filter cleaning method	Rotating nozzle
Filter surface	8 m^2
Type of filter	Filter cartridge
Filter material	ePTFE membrane
Filter efficiency	> 99.9 %
Dust classification	M
Basic data	
Extraction capacity	1200 m^3/h
Max. fan performance	3000 m^3/h
Dimensions (w x h x t)	655 x 655 x 1355 mm
Weight	146 kg
Motor power	1,5 kW
Power supply	3 x 400 V / 50 Hz
Rated current	3.5 A
Noise level	71 dB(A)
Additional information	
Fan type	Radial fan
Compressed air supply	5 - 6 bar
Quantity of extraction arms	1
Exhaust arm type	rigid metal tube arm/flexible exhaust arm
Diameter extraction arm	150 mm
Length of exhaust arm	2 m
Compressed air reservoir	25 l
Capacity Dust collection container	11 l

Properties

- 360 degrees rotating exhaust hood with damper
- Automatic filter cleaning, pressure-controlled
- KemTex® ePTFE filter cartridges
- Arm from 5 m with boom
- Available with two arms
- Silencer
- Control box

Accessories

- Automatic start/stop
- Workplace lighting incl. on/off switch at the hood

Suitable for alveole exchangeable dusts
separation > 99 % of particles < 0,4 µm

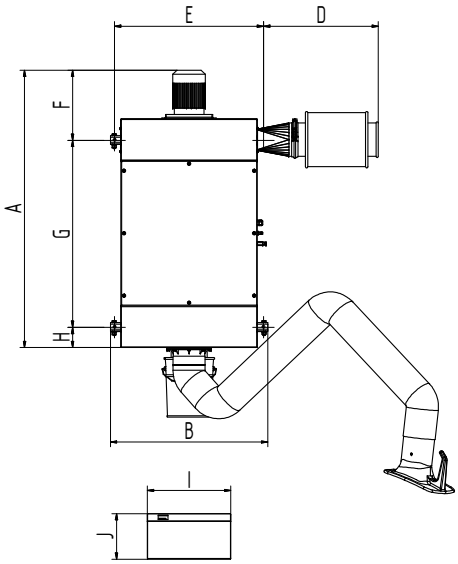

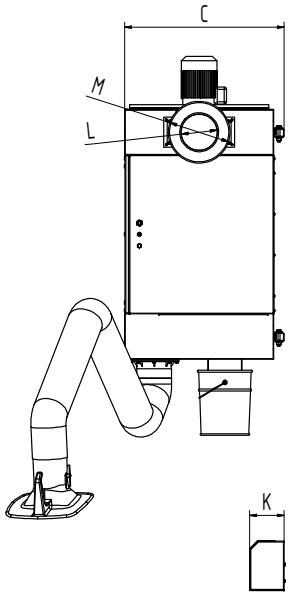

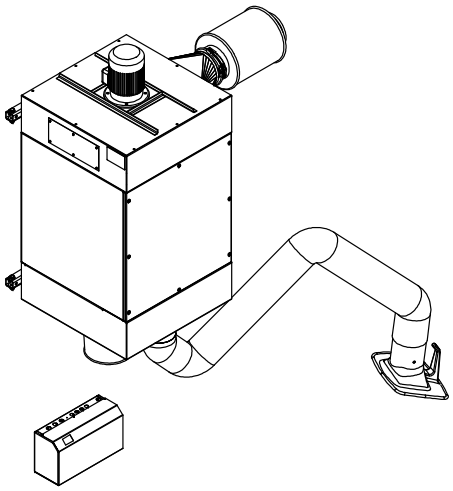

Technical Data

Dimensions	
A	1332 mm
B	755 mm
C	701 mm
D	551 mm
E	715 mm
F	337 mm
G	898 mm
H	97 mm
I	400 mm
J	218 mm
K	151 mm
L	158 mm
M	271 mm